"UNION" SERVICE SPECIFICATION

NUMBER 2418-A

UNION SWITCH & SIGNAL ..... SWISSVALE, PA.
DIVISION OF WESTINGHOUSE AIR BRAKE COMPANY

SLOT MAGNET ASSEMBLY OF T-2 D.C. SIGNALS EQUIPPED WITH SLOT MAGNET WITH PICK-UP AND HOLDING WINDING IN SERIES. SLOT CONTACT FOR MOTOR CIRCUIT.
(Covered by Instruction Pamphlet U-5008.)
For other information on T-2 D.C. signals, see Service Specification 2418.

****

In the T-2 slot magnet assemblies, the detail parts of each assembly are individually fitted to produce proper stroke, correct engagement of locking pawls with stop drum blades, as well as proper adjustment of slot contacts. For this reason the individual parts of slots are not interchangeable unless proper adjustments are made at the time of assembly.

Therefore, in making repairs or changing coils of T-2 slot magnet assemblies, care should be exercised not to interchange or mix parts from several slot assemblies as thereby considerable time can be saved in making the necessary adjustments.

1. Replacing Magnet Coils.

To replace the magnet coil of the slot magnet it is necessary to disconnect the armature stem from the pawl, and the wire leads from the coil assembly by taking out the terminal screws. This permits the coil assembly to be unscrewed from the slot mechanism. The magnet now can be dismantled by removing the magnet cap, removing the cotter pin holding the armature lock nut, and removing the armature and stem.

After this operation the lock screw at the upper end of the magnet should be removed, and then by means of wrenches the back plate can be removed, which permits replacement of the coil.

With new coil inserted in place and the wire terminals properly lined up, reassemble the parts in the reverse order given above. It should be noted that at least one fibre washer, Pc.1701-8078-Sh.1 and one black Linen washer Pc.1700-8078-Sh.47 are in place between the iron back plate and the coil. It is satisfactory to use more than one fibre washer if necessary to hold the coil firmly in place.

When assembling these magnets, the core must be set so as to bring its pole face in the same plane with the pole face of the case. The face of the brass head on the magnet or brass plate shall not extend beyond the plane of these pole faces.

2. Adjustment of Locking Pawl.

No adjustment of the locking pawl will be necessary unless either the pawl or the slot case has been replaced. If either of these parts is changed out, the following adjustment of locking pawl must be made:

A. Locking Pawl Releasing Torque.

The releasing torque (combined effect of springs, deadweight of armature, stem, and pawl) should be not less than 25 ounces, and for the armature stem and pawl only the torque should be 15 ounces.

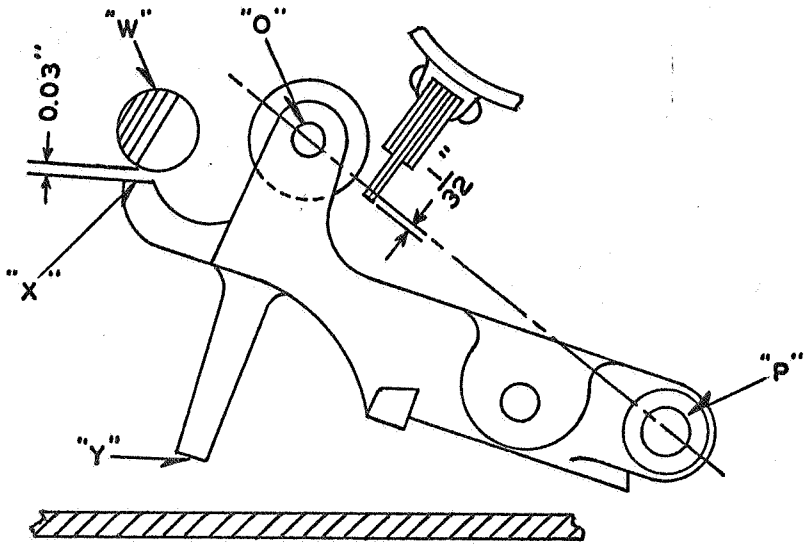

Fig. 1

B. Adjustments.

a. File stop X, Fig. 1 until roller takes position shown when X is 0.030" away from stop W, cast on the housing. This adjustment is important. A gauge should be constructed to connect centers O and P so as to check the 1/32" overlap of the blades on the stop drum.

b. File stop Y so that when stop X (already adjusted) is brought up against W, the distance between lowest point of Y and the bottom of the housing is 0.500" to 0.530" for low voltage slots, and 0.562" to 0.592" for high voltage slots. This adjustment provides a clearance of 1/8" between the roller and the end of the stop drum blade when the pawl is in the down position. Roller and Pin to have end-play from 0.022" to 0.040".

3. Adjustment of Slot Contacts (Low Voltage)

The contacts located in the slot case should be adjusted as follows:

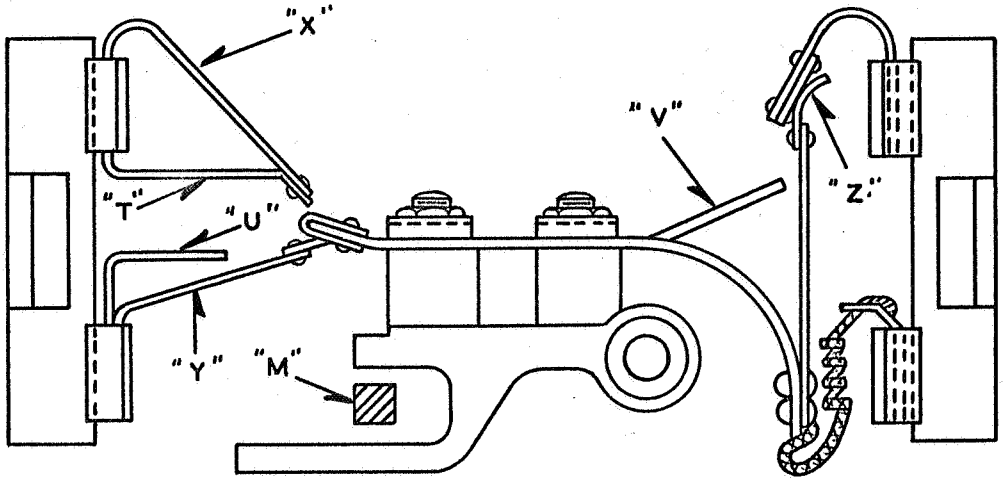

Fig. 2

A. Spring Y, Fig. 2 to be compressed 1/32" when locking pawl is resting on stop Y, Fig. 1. In this position, opening between contact finger and spring X should be not less than 1/16" or more than 5/64" and spring X should rest on stop T.

B. When stop M, Fig. 2, (on locking pawl) is raised slightly, spring Z shall be strong enough to lift contact finger and make contact with X. When stop M is allowed to drop on the contact bracket, spring Y should be compressed 1/32" and stop Y, Fig. 1, should just rest on the housing.

C. When locking pawl is lifted until stop X, Fig. 1, is 0.030" from stop W, contact X, Fig. 2, should be compressed about 3/32". Contact opening for spring Y, Fig. 2, in this position should be not less than 1/8" and Y should rest on the stop U. Contact opening for spring Z should be 1/32".

D. When stop Y, Fig. 1, rests on slot housing, spring Z, Fig. 2, should be compressed 1/32" and when contact bracket is lifted to open contact Z, spring Z, should rest on stop V. The movement of the contact bracket is limited by a stop, which also prevents bending of contact springs. Adjustment is as follows:

a. Set stop to allow contact bracket to travel 1/32" further up than lug M, Fig. 2, will carry it.

b. After final adjustment of slot is completed this stop shall be securely fastened by driving a dowel pin through stop and into the slot housing casting.

4. Adjustment of Slot Contacts (High Voltage)

The contacts located in the slot case should be adjusted as follows:

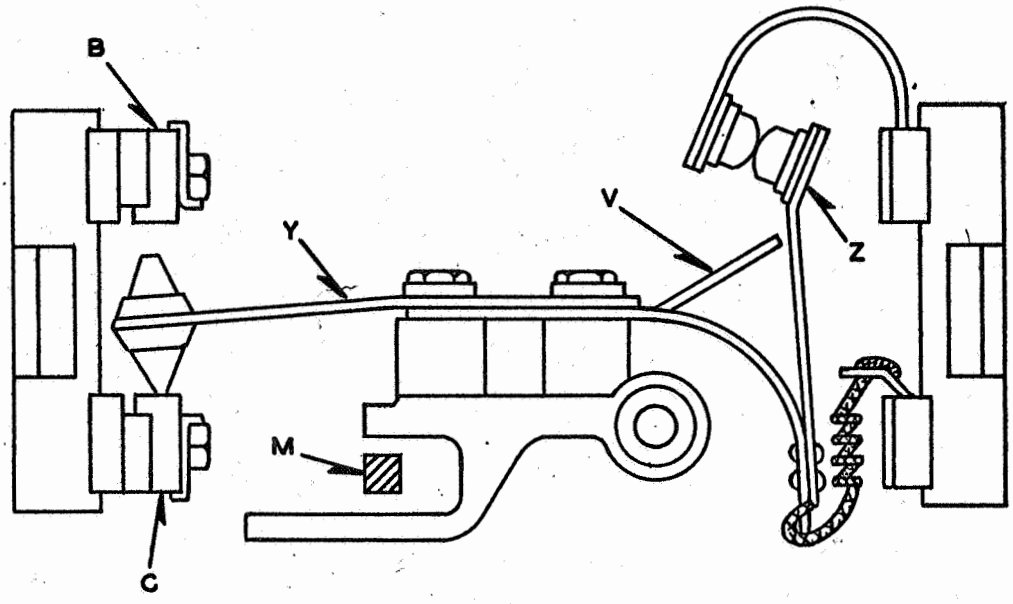

Fig. 2A

A. Spring Y, Fig. 2A to be compressed 1/32" when locking pawl is resting on stop Y, Fig. 1. In this position, opening between contact carbon B and spring Y should be not less than 5/32" or more than 3/16".

B. When stop M, Fig. 2A (on locking pawl) is raised slightly, spring Z shall be strong enough to lift contact finger and make contact with contact B. When stop M is allowed to drop on the contact bracket, spring Y should be compressed 1/32" and stop Y, Fig. 1, should just rest on the housing.

C. When locking pawl is lifted until stop X, Fig. 1, is 0.030" from stop W, Spring Y, Fig. 2A should be compressed about 1/16". Contact opening between spring Y, and carbon contact C Fig. 2A in this position should be not less than 5/32" and contact opening for spring Z should be 1/32".

D. When stop Y, Fig. 1, rests on slot housing, spring Z, Fig. 2A should be compressed 3/64", and when contact bracket is lifted to open contact Z, spring Z, should rest on stop V. The movement of the contact bracket is limited by a stop, which also prevents bending of contact springs. Adjustment is as follows:

a. Set stop to allow contact bracket to travel 1/32" further up than lug M, Fig. 2A will carry it.

b. After final adjustment of slot is completed this stop shall be securely fastened by driving a dowel pin through stop and into the slot housing casting.

5. Assembling Slot Magnet to Slot Housing:

A. General: Magnets must be screwed into the slot housing so tightly that they cannot be removed except with a wrench. Slow acting magnet must have name plate located in front. Ordinary acting magnet must have its terminals within 15° of the position shown in Fig. 3.

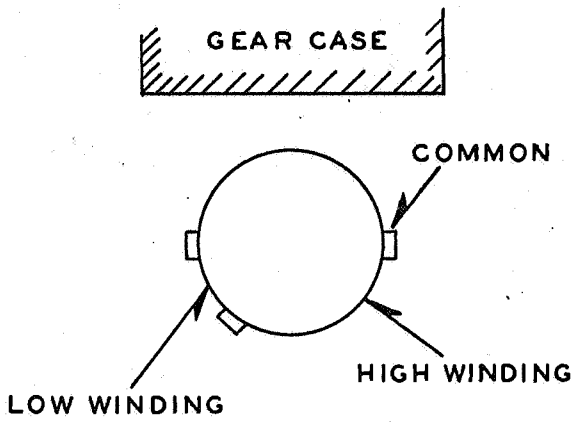

Fig. 3

With the armature stem fastened to the locking pawl, the former must be perfectly free and show no signs of binding in any position of pawl.

Stem must set exactly at right angles to armature and the armature must be perfectly flat and free from warp.

The clearance between stem and core and bushing in the core should be carefully examined to note that this clearance is about 0.010". There should be no fins or threads of metal at any point on the stem and the latter should have a smooth finish so that it will work freely in the core.

B. Adjustment of armature stem is as follows:

a. Bring armature up tightly against pole face and note that stem is slightly too long, so that when core pins are seating on the pole face, the distance between W and X, Fig. 1, will be less than 0.030". Remove armature and countersink tapped hole until stop X clears W, Fig. 1, by 0.030" when stem is screwed tightly into armature.

b. Tighten lock nut on armature and pin same to stem being careful that the cotter pin is bent close to the nut so that it will not catch on the threads in the magnet cap.

It is important that stem be screwed tightly into armature so that it is not possible to change the setting of the armature after the lock nut has been pinned in place.

c. The length of the armature stem may be such as to rest on the magnet cap and prevent stop Y, Fig. 1, from resting on the slot housing when the armature is down. If this condition is present, remove cap and file bottom of armature stem until stop Y, Fig. 1, just fails to lift when cap is screwed up tightly in position.

6. Final Inspection of Slot Mechanism

After all adjustments have been made the completed mechanism should be carefully checked and the following parts noted:

A. When contact finger is held half way between springs X and Y, Fig. 2, there should be evident contact opening on both sides. Failure to have this adjustment will result in a circuit through XY to short circuit the battery.

B. All contact tips should bear evenly on their respective anvils and without touching rivets.

C. All members of slot mechanism must move freely on their bearings.

WRITTEN BY: B.Lazich 3-28-32 APPROVED BY: R. M. Gilson

CHECKED BY: N.C. Shaw 3-28-32 DATE: 3-29-32

AWF 3-28-32